PROMOTECH®

smart tools
for heavy tasks

FM 37982

PRO-36RH | PETROL MOTOR RAIL DRILL

A very powerful compact and light weight machine equipped with petrol Honda 4-stroke engine for drilling in rails. Fast positioning, quick clamping and instant unlocking mechanisms make it easy to use and safe device.

PRO 36 RH enables drilling in rails of any standard by means of 2pcs of optional rail profile templates and 1pcs of hole centre positioner, to be chosen by customers from a comprehensive range of auxiliary accessories dedicated to a variety of types of rails.

Pressure Coolant system including 5l bottle enables forced feeding of cooling medium in any drilling positions. It is ideal solution when gravitational feeding fails

PRO 36RH can also be ordered with electric motor as PRO 36R.

It weighs only 18,5 kg (40,8 lbs).

Weight 18.5 kg
(40.8 lbs)

Custom made
positioners
and templates
available
on request

Honda
4-stroke Motor

Core drill:
max 36 mm
(1-7/16")

Twist drill:
max 16 mm(5/8")
with Weldon Shank
19mm (3/4")

Depth of cut:
up to 30 mm
(1-3/16")

Stroke:
39 mm
(1-1/2")

Speed:
225 rpm

Motor Power:
1500 W

Weight:
18.5 kg
(40.8 lbs)

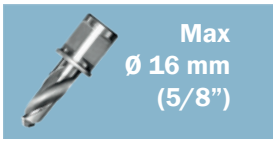

PRO-36RH TECHNICAL SPECIFICATION	
Spindle	Arbor 19 mm; 3/4" Weldon
Tool Holder	
Max milling capacity	Ø 36 mm (1 7/16")
Max drilling capacity	Ø 16 mm (5/8")
Stroke	39 mm (1 1/2")
Max depth of cut	30 mm (1 3/16")
Motor type	4-stroke petrol engine
Power consumption	1500 W
Motor Power	1500 W
Speeds	225 rpm
Weight	18.5 kg (40.8 lbs)
Product Code	WRT-0565-10-00-00-0

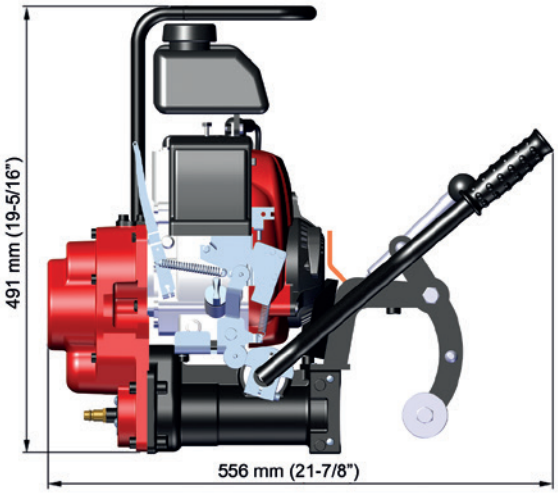

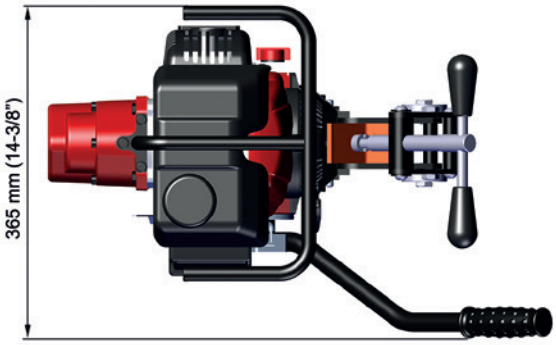

Standard shipping set:

- Rail Drilling Machine
- Metal Box
- Pressure Coolant 5l Bottle Assembly
- Set of Tools
- Instruction Manual (English)
- Standard shipping weight – 40 kg (86 lbs 5 oz)

Rail profile templates and hole centre positioner are to be ordered, separately.

Upon customer's request any rail profile templates and hole centre positioners are subject to manufacture to meet any required rail standard.

Selected additional accessories:

- UST-0275-00-01-00-0 S49 Rail Profile Template
- UST-0275-00-02-00-0 UIC 60 Rail Profile Template
- WZR-0275-13-00-00-0 S49 Hole Centre Positioner
- WZR-0275-14-00-00-0 UIC 60 Hole Centre Positioner
- ZSP-0275-38-00-00-0 Double-sided counter-sinking tool ø 36mm (1 7/16")

All information is subject to change without notice 1808

PROMOTECH Sp. z o.o.
ul. Elewatorska 23/1, 15-620 BIAŁYSTOK, POLAND
tel. (+48 85) 678 34 05, fax (+48 85) 662 78 77
marketing@promotech.eu www.promotech.eu

Find us on

Your local dealer: